Original guide

OPERATION MANUAL

PART I

Installation of the Road Blocker AUIA-359 (Speed Bump)

Certified according to:
ASTM F2656 M-15+IWA14-1, M30

Contents:

Statement of equipment compliance..... 3
1. General Guidelines 4
2. Product Description 7
3. Product Purpose..... 8
4.Technical Features 9
5.Product Specification 12
6.Road Blocker Installation 13
7.Connection of Road Blocker to control unit 23
8.Precommissioning 24
9. Operation Regulations 25
10.Warranty Liabilities 30
11. Hydraulic System 31
12. Notes 34

The Manual is provided for joint use with the ***Operation Manual. Part II. Wiring of the Road Blockers (of RB series)***

- *This Manual is an integral part of the product and shall be handed over to the customer. The manual shall be kept for future use and to be consulted, if appropriate.*
- *If the Road Blocker is resold, handed over to another owner or transported to another place, make sure that this manual is enclosed to the product to be used by new owner and/or maintenance staff during installation and/or operation.*

The following abbreviation are used in this Manual:

- *M - Maintenance;*
- *HU - Hydraulic Unit;*
- *HC - Hydraulic Cylinder;*
- *CU - Central Unit;*
- *R.s.l. - Road surface level (reference point ± 0.000)*

STATEMENT OF EQUIPMENT COMPLIANCE

Confirmation of compliance with fundamental safety requirements specified in the following Directives EEC:

- *2006/42/ EC;*
- *2014/30/EC;*
- *2014/35/EC;*

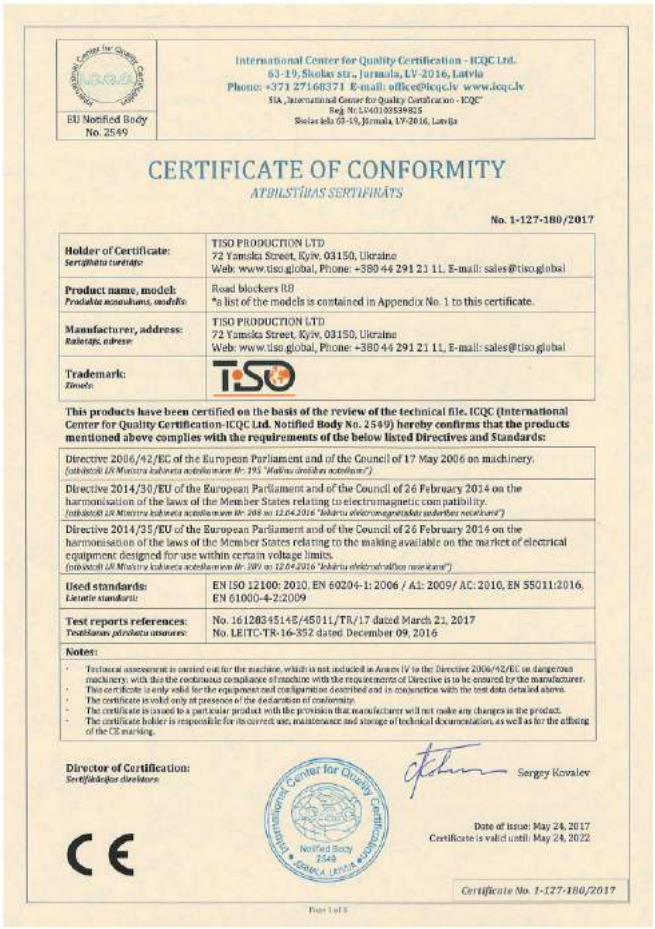

EU Notified Body No. 2549

International Center for Quality Certification - ICQC Ltd.
63-19, Skolas str., Jurmala, LV-2016, Latvia
Phone: +371 27168371 E-mail: office@icqc.lv www.icqc.lv
SIA „International Center for Quality Certification - ICQC"
Reģ. Nr.LV40103539825
Skolas iela 63-19, Jūrmala, LV-2016, Latvija

CERTIFICATE OF CONFORMITY

ATBILSTĪBAS SERTIFIKĀTS

No. 1-127-180/2017

Holder of Certificate: *Sertifikāta turētājs:*	TISO PRODUCTION LTD 72 Yamska Street, Kyiv, 03150, Ukraine Web: www.tiso.global, Phone: +380 44 291 21 11, E-mail: sales@tiso.global
Product name, model: *Produkta nosaukums, modelis:*	Road blockers RB *a list of the models is contained in Appendix No. 1 to this certificate.
Manufacturer, address: *Ražotājs, adrese*	TISO PRODUCTION LTD 72 Yamska Street, Kyiv, 03150, Ukraine Web: www.tiso.global, Phone: +380 44 291 21 11, E-mail: sales@tiso.global
Trademark: *Zīmols:*	TISO

This products have been certified on the basis of the review of the technical file. ICQC (International Center for Quality Certification-ICQC Ltd. Notified Body No. 2549) hereby confirms that the products mentioned above complies with the requirements of the below listed Directives and Standards:

Directive 2006/42/EC of the European Parliament and of the Council of 17 May 2006 on machinery. *(izbēdzot LR Ministru kabineta noteikumus Nr. 193 "Mašīnu drošības noteikumi")*
Directive 2014/30/EU of the European Parliament and of the Council of 26 February 2014 on the harmonisation of the laws of the Member States relating to electromagnetic compatibility. *(izbēdzot LR Ministru kabineta noteikumus Nr. 208 no 12.04.2016 "Iekārtu elektromagnētiskās saderības noteikumi")*
Directive 2014/35/EU of the European Parliament and of the Council of 26 February 2014 on the harmonisation of the laws of the Member States relating to the making available on the market of electrical equipment designed for use within certain voltage limits. *(izvairoties LR Ministru kabineta noteikumiem Nr. 189 no 12.04.2016 "Iekārtu elektroiekārtas noteikumi")*

Used standards: *Lietotie standarti:*	EN ISO 12100: 2010, EN 60204-1: 2006 / A1: 2009/ AC: 2010, EN 55011:2016, EN 61000-4-2:2009
Test reports references: *Testēšanas pārskatu numurs:*	No. 16128345145/45011/TR/17 dated March 21, 2017 No. LEITC-TR-16-352 dated December 09, 2016

Notes:

- Technical assessment is carried out for the machine, which is not included in Annex IV to the Directive 2006/42/EC on dangerous machinery, with that the continuous compliance of machine with the requirements of Directive is to be ensured by the manufacturer.
- This certificate is only valid for the equipment and configuration described and in conjunction with the test data detailed above.
- The certificate is valid only at presence of the declaration of conformity.
- The certificate is issued to a particular product with the provision that manufacturer will not make any changes in the product.
- The certificate holder is responsible for its correct use, maintenance and storage of technical documentation, as well as for the affixing of the CE marking.

Director of Certification: *Sertifikācijas direktors:* Sergey Kovalev

CE

Date of issue: May 24, 2017
Certificate is valid until: May 24, 2022

Certificate No. 1-127-180/2017

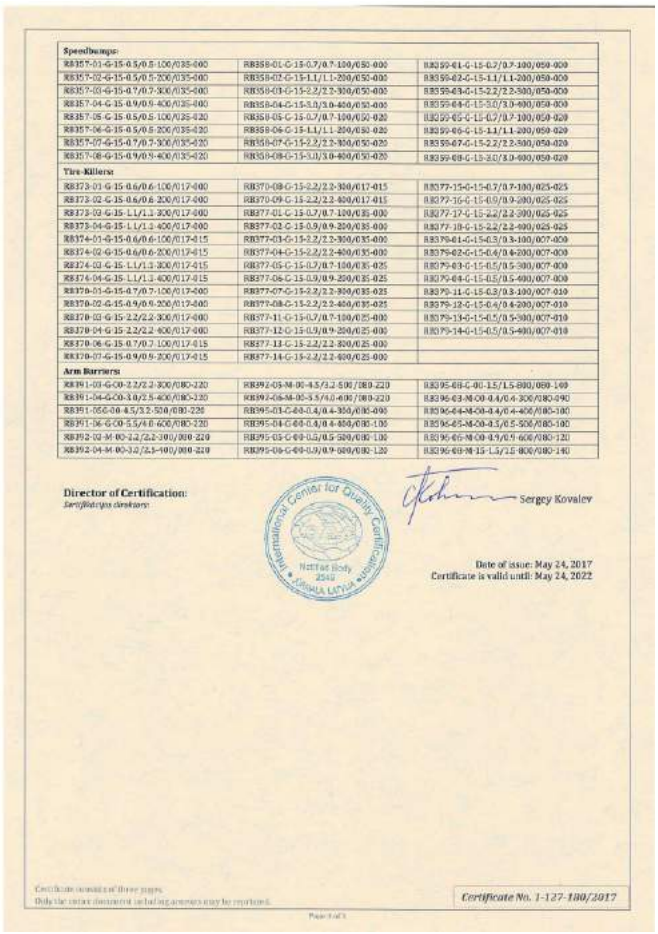

Speedbumps:		
RB357-01-G-15-0.5/0.5-100/035-000	RB358-01-G-15-0.7/0.7-100/050-000	RB359-01-G-15-0.7/0.7-100/050-000
RB357-02-G-15-0.5/0.5-200/035-000	RB358-02-G-15-1.1/1.1-200/050-000	RB359-02-G-15-1.1/1.1-200/050-000
RB357-03-G-15-0.7/0.7-300/035-000	RB358-03-G-15-2.2/2.2-300/050-000	RB359-03-G-15-2.2/2.2-300/050-000
RB357-04-G-15-0.9/0.9-400/035-000	RB358-04-G-15-3.0/3.0-400/050-000	RB359-04-G-15-3.0/3.0-400/050-000
RB357-05-G-15-0.5/0.5-100/035-020	RB358-05-G-15-0.7/0.7-100/050-020	RB359-05-G-15-0.7/0.7-100/050-020
RB357-06-G-15-0.5/0.5-200/035-020	RB358-06-G-15-1.1/1.1-200/050-020	RB359-06-G-15-1.1/1.1-200/050-020
RB357-07-G-15-0.7/0.7-300/035-020	RB358-07-G-15-2.2/2.2-300/050-020	RB359-07-G-15-2.2/2.2-300/050-020
RB357-08-G-15-0.9/0.9-400/035-020	RB358-08-G-15-3.0/3.0-400/050-020	RB359-08-G-15-3.0/3.0-400/050-020
Tire-Killers:		
RB373-01-G-15-0.6/0.6-100/017-000	RB370-08-G-15-2.2/2.2-300/017-015	RB377-15-G-15-0.7/0.7-100/025-025
RB373-02-G-15-0.6/0.6-200/017-000	RB370-09-G-15-2.2/2.2-400/017-015	RB377-16-G-15-0.9/0.9-200/025-025
RB373-03-G-15-1.1/1.1-300/017-000	RB377-01-G-15-0.7/0.7-100/035-000	RB377-17-G-15-2.2/2.2-300/025-025
RB373-04-G-15-1.1/1.1-400/017-000	RB377-02-G-15-0.9/0.9-200/035-000	RB377-18-G-15-2.2/2.2-400/025-025
RB374-01-G-15-0.6/0.6-100/017-015	RB377-03-G-15-2.2/2.2-300/035-000	RB378-61-G-15-0.3/0.3-100/007-000
RB374-02-G-15-0.6/0.6-200/017-015	RB377-04-G-15-2.2/2.2-400/035-000	RB379-02-G-15-0.4/0.4-200/007-000
RB374-03-G-15-1.1/1.1-300/017-015	RB377-05-G-15-0.7/0.7-100/035-025	RB379-03-G-15-0.5/0.5-300/007-000
RB374-04-G-15-1.1/1.1-400/017-015	RB377-06-G-15-0.9/0.9-200/035-025	RB379-04-G-15-0.5/0.5-400/007-000
RB370-01-G-15-0.7/0.7-100/017-000	RB377-07-G-15-2.2/2.2-300/035-025	RB379-11-G-15-0.3/0.3-100/007-010
RB370-02-G-15-0.9/0.9-200/017-000	RB377-08-G-15-2.2/2.2-400/035-025	RB379-12-G-15-0.4/0.4-200/007-010
RB370-03-G-15-2.2/2.2-300/017-000	RB377-11-G-15-0.7/0.7-100/025-000	RB379-13-G-15-0.5/0.5-300/007-010
RB370-04-G-15-2.2/2.2-400/017-000	RB377-12-G-15-0.9/0.9-200/025-000	RB379-14-G-15-0.5/0.5-400/007-010
RB370-06-G-15-0.7/0.7-100/017-015	RB377-13-G-15-2.2/2.2-300/025-000	
RB370-07-G-15-0.9/0.9-200/017-015	RB377-14-G-15-2.2/2.2-400/025-000	
Arm Barriers:		
RB391-03-G-00-2.2/2.2-300/080-220	RB392-03-M-00-4.5/4.5-600/080-220	RB395-68-G-00-1.5/1.5-800/080-140
RB391-04-G-00-3.0/2.5-400/080-220	RB392-06-M-00-5.5/4.0-600/080-220	RB396-63-M-00-0.4/0.4-300/080-090
RB391-06-G-00-4.5/3.2-500/080-220	RB395-03-G-00-0.4/0.4-300/080-090	RB396-64-M-00-0.4/0.4-400/080-100
RB391-06-G-00-5.5/4.0-600/080-220	RB395-04-G-00-0.4/0.4-400/080-100	RB396-65-M-00-0.5/0.5-500/080-100
RB392-02-M-00-2.2/2.2-300/080-220	RB395-05-G-00-0.5/0.5-500/080-100	RB396-66-M-00-0.9/0.9-600/080-120
RB392-04-M-00-3.0/2.5-400/080-220	RB395-06-G-00-0.9/0.9-600/080-120	RB396-68-M-15-1.5/1.5-800/080-140

Director of Certification: Sergey Kovalev

Date of issue: May 24, 2017
Certificate is valid until: May 24, 2022

Certificate No. 1-127-180/2017

1. General safety guidelines

The Manual should be scrutinized prior to the equipment installation and operation to ensure the human safety. Safety is not ensured in case of improper operation or use.

- *The Company "TiSO" does its best to provide surety and accuracy of this Manual and reflect substantial design modifications. Continuous improvement may cause little differences between the equipment to be supplied the description herein.*

- *The Manual to be kept for future use.*

The personnel servicing operating electrical installations or performing their adjustment, wiring, repair, maintenance and installation shall be trained to handle the relevant model! Training shall be performed by the product manufacturer or product manufacturer's representatives!

- *Operating equipment to be beyond the reach of children and outsiders. The manufacturer shall not be liable for violation of safety rules.*

In case of improper operation and noncompliance with requirements of instruction manuals the road blocker may constitute a danger to life and health of people by presence of increased voltage in electric circuits and movable parts!
The product to be transported only in down state!

- *Any actions that are not explicitly specified in this Manual are prohibited.*

- *Safety devices provide security of potentially hazardous areas.*

1.1 Instructions to installer:

1. The equipment installation instructions shall be complied with for the purpose of safety.
2. The road blocker shall be installed according to the code of practice in compliance with safety regulations for installation.
3. The equipment shall be installed when it is deenergized.
4. Packing materials are subject to disposal according to the applicable standards.
5. The road blocker installation procedure, specified in the Manual, shall be strictly observed.

- It is forbidden to modify the equipment configuration and to use materials and components being outside the scope of delivery and not specified by this Manual.
- It is forbidden to install equipment during thunderstorm, heavy rain or snowfall, in explosive environment and obscured conditions.Installation area shall be prepared according to the applicable standards.

- The road blocker shall be installed, connected and precommissioned by the qualified professionals.

6. When faults or defects are detected, the Supplier's service department shall be referred to;
7. The installer shall provide the user with the required information on operation of the system in manual mode in case of emergency
8. The manufacturer shall not be liable for the equipment operation in the following events:
    - noncompliance with installation procedure;
    - use of nonstandard materials and components;
    - performance of work by unqualified personnel.
9. The manufacturer shall not be liable for compliance with safety measures during installation of equipment by the personnel outside the Company's service department.

1.2 Instructions to user:

1. The operation regulations, prescribed by this Manual, shall be strictly observed.
2. No modifications of the equipment components shall be made.
3. The equipment shall be used for intended purposes, specified by the manufacturer.
4. Don't try to repair or adjust the road blocker on your own.The relevant service department shall be referred to. Breaking of seals shall cancel the manufacturer's warranty liabilities.
5. The road blocker control units (panels) shall be beyond the reach of outsiders.
6. The company "TiSO" shall not be liable for improper operation of equipment and violation of safety measures by the user.

- The Road Blocker must be installed, precommissioned and serviced by the certified professionals having the relevant qualification and being familiar with the product design and instruction manuals:

  - Installation and operation manual (Part I, Part II);
  - Datasheet;
  - Instruction manuals for components.

- Technical inspections, maintenance, adjustment and repair shall be performed only when the road blocker is deenergized.

- The device, designed and manufactured in accordance with directives of the European Union, shall be marked according to CE standards.

Make sure of availability of the plate with manufacturer's details:

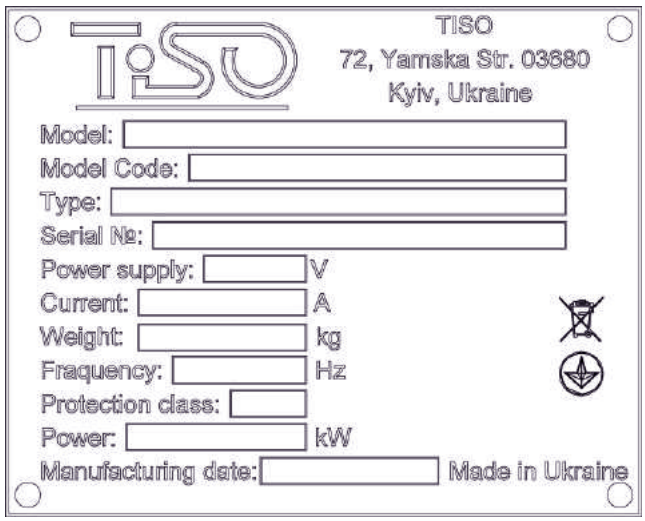

2. Product Description

2.1 The automatic road blocker (speed bump AUIA-359) is a static platform with front and side ramps* and built-in anticrossing element (raising platform).

In down position it serves as a "speed bump" to reduce the vehicle speed during vehicle access to the protected area (site) and does not obstruct the traffic. In up position the anticrossing platform prevets unauthorized vehicle access.

* - The road blocker may be manufactured in submersible version (without ramps) and installed flush with roadbed.

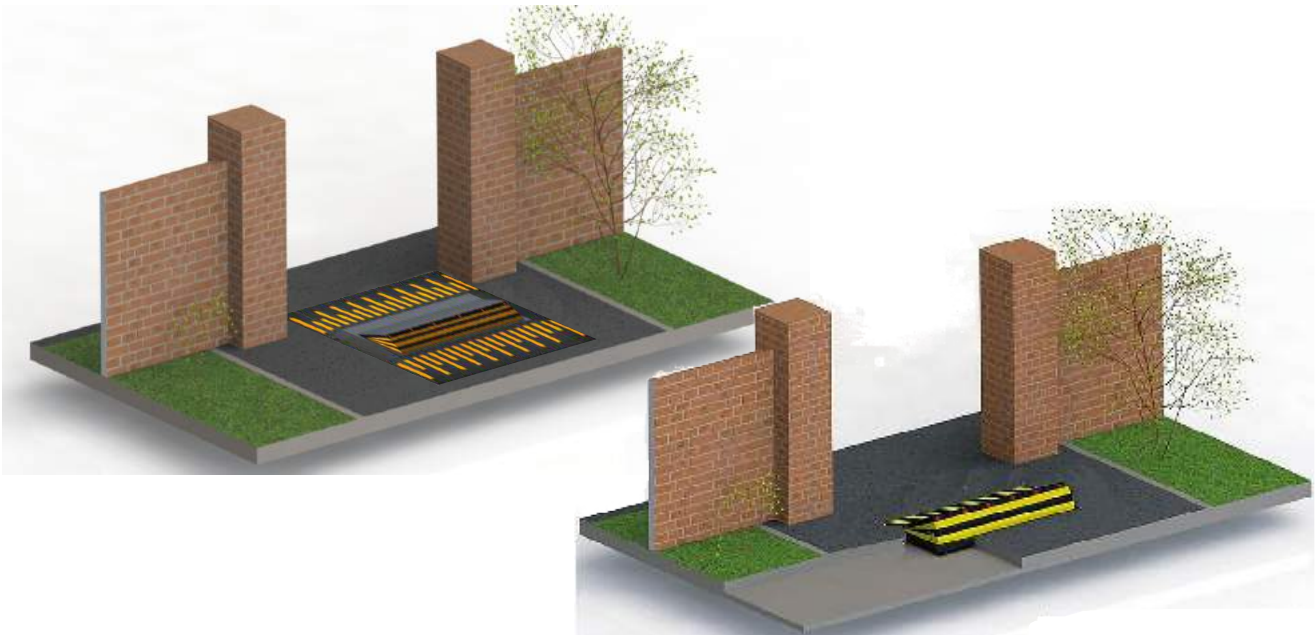

2.2 Coating - warning paint (black and yellow);

2.3 The road blocker can be controlled:

- from wire or wireless remote control panel;
- automatically via access control system;
- manually (manual sinking in case of power failure).

Independent control of two road blockers with one control unit and parallel (simultaneous) group control of more than two road blockers are allowed.

3. Product Purpose

3.1 The road blockers are used at public, commercial and private facilities for unauthorized vehicle access control, vehicular traffic management and regulation at different sites and adjacent areas.

3.2 The road blockers are recommended for passenger transport facilities, approaches to sports facilities and government facilities, to be installed in front of shops, hotels, shopping malls and office centers, health care facilities, at the approaches to cottages and cottage settlements, at central urban and historical sites, industrial and special facilities.

3.3 The road blockers can be installed in conjunction with other traffic control and unauthorized access prevention equipment.

3.4 By impact of environmental factors the road blocker complies with EN 300 019-1-4 and is designed for operation in moderate climate (Y1) with acceptable ambient temperature - 10°C to +40°C.

3.5 The product has been sucsessfully tested (crash test) within the certification system ASTM F 2656-07:

CTS

Contracting Client:
TISO PRODUCTION, LTD
72, Yamska str.
03160 Kyiv
Ukraine

Certificate

of passed Barrier Testing Programm

ASTM F2656/F2656M-15 + IWA14-1, M30, 15th December 2016, CTS-Test No: 18531	
Type of product:	Road Blocker Speedbump „AUIA - 359-04"
Vehicle penetration:	ASTM: -0.67 m IWA14-1: 0.25 m
Mass [Target]:	7200 kg (±150 kg)
Mass [Test]:	7276 kg
Impact speed [Target]:	48.0 km/h (47.0 km/h – 51.0 km/h)
Impact speed [Test]:	48.6 km/h
Angle:	90 °
Major debris:	no
Kinetic energy:	663 kJ
Observations	
Vehicle restrained:	yes
Vehicle immobilised:	yes
Penetration Rating ASTM:	P1 (-0.67m)
Performance Rating IWA14-1:	Blocker V/7200[N2B]/48/90:0.25

Sincerely CTS

Dipl.-Ing. Peter Schmidtleising
(Managing Partner)

Amelunxenstraße 50, 48167 Münster, Germany

www.crashtest-service.com

4. Technical Features

4.1 Speed Bump Technical Feature

Road Blocker trade mark	**Speedbump RB359**		
Model	RB359-02	RB359-03	RB359-04
Actuator type and location	hydraulic, external		
Installation type	surface-mount/submersible		
Access blocking width, m	2	3	4
Road blocker overall dimensions, mm *Surface-mount* - ramp - 500	2054x1770x118	3056x1770x118	3568x1770x118
- ramp -1000	-	3068x2260x118	4068x2260x118
Submersible	2000 x1170x118	3000x1170x118	4000x1170x118
Overall dimensions with ramps, mm *Surface-mount* - ramp - 500	3172x2310x118	4172x2310x118	5172x2310x118
- ramp -1000	-	4172x3290x118	5172x3290x118
Weight of surface-mount road blocker, kg *Ramp 500*: - central unit/central unit+ramp	840/1330	1130 /1620	1522 / 2012
Ramp 1000: - central unit/central unit+ramp	-	1270 / 2220	1688 / 2873
Weight of submersible road blocker, kg	670	1012	1270
Power consumption, kW	1,5	2,2	3,0
Installation depth, mm *surface-mount/submersible*	- / 300		
Anticrossing platform lift height, mm	500		
Maximum axle weight limit, t	15		
Penetration resistance, kJ	656		
Maximum raising/sinking time, s	4,5 / 4,5		
Power supply	50/60 Hz; 3Ph-400V		
Road blocker Index of protection	IP 67		
Control box index of protection	IP 54		
Temperature conditions, ^{0}C	-10 /+40		
Temperature conditions (optional), ^{0}C	-40 / +60		
Material	structural steel C22		
Ramp material	structural rubber		
Light indication	built-in LEDs		
Up position locking	hydraulic unit hydraulic lock		
Manual emergency sinking	manual release mechanical device		
Operating mode	intensive		

**heating to be used at temperatures below -10°C and cooler t o be used at temperatures above +40°C.*

4.2 Surface-mount road blocker dimensions

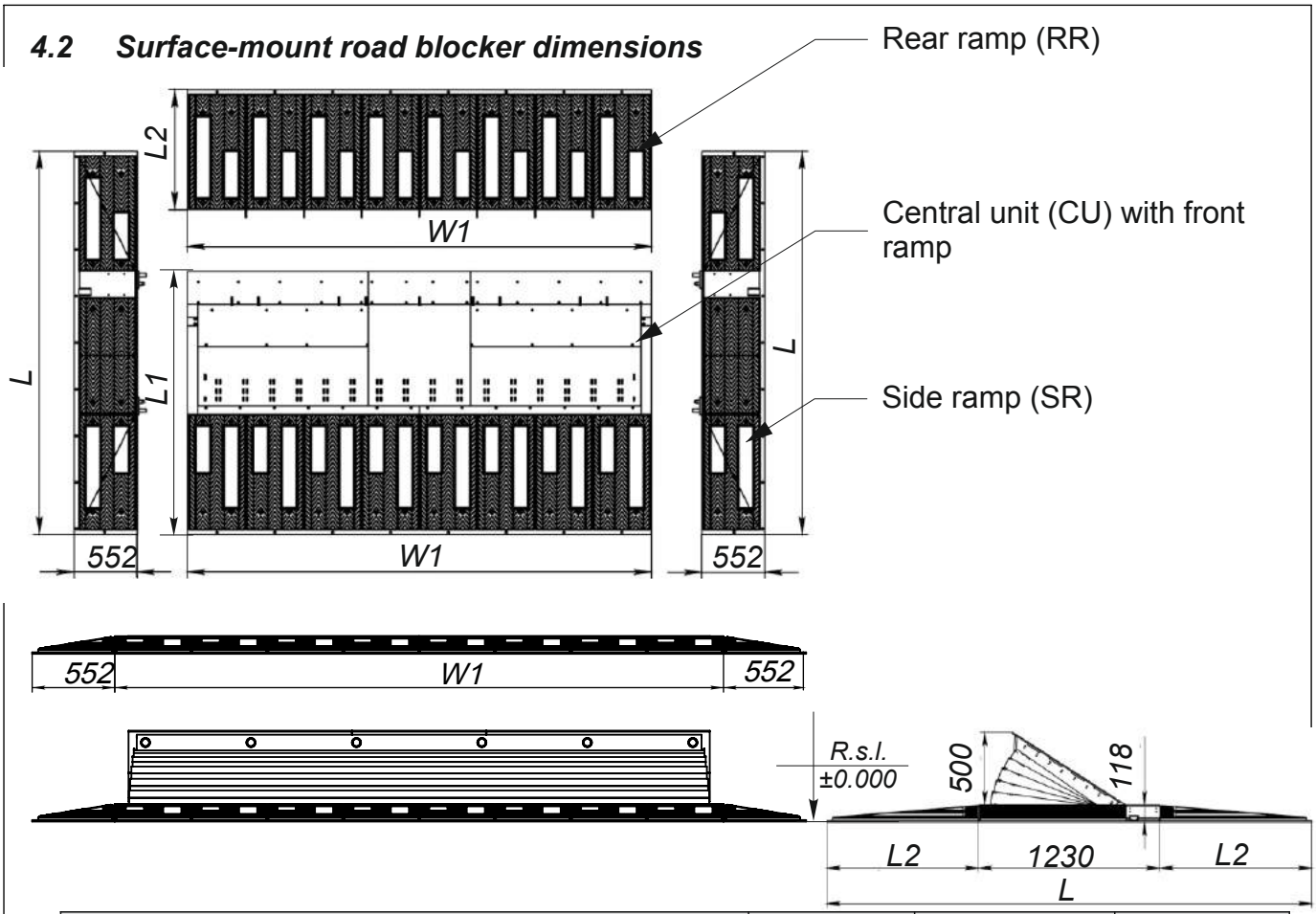

Model	RB359-02	RB359-03		RB359-04	
Access blocking width, mm	2000	3000		4000	
Overall width, mm (W)	3160	4160		5170	
Overall length, mm (L)	2310	-	2310	3290	2310	3290
Anticrossing device width, mm (W1)	2054	3056		4068	
Anticrossing device length, mm (L1)	1770	1770	2260	1770	2260
Length of rear and front ramps, mm (L2)	500	500	1000	500	1000

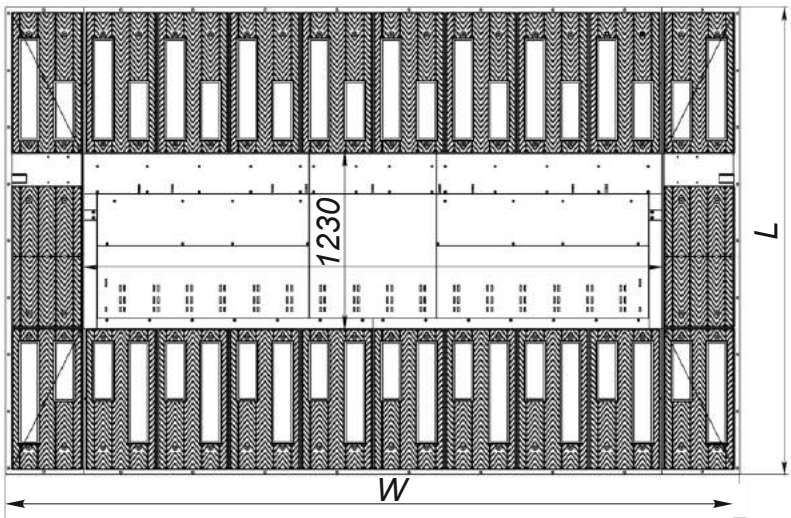

4.3 Submersible road blocker dimensions

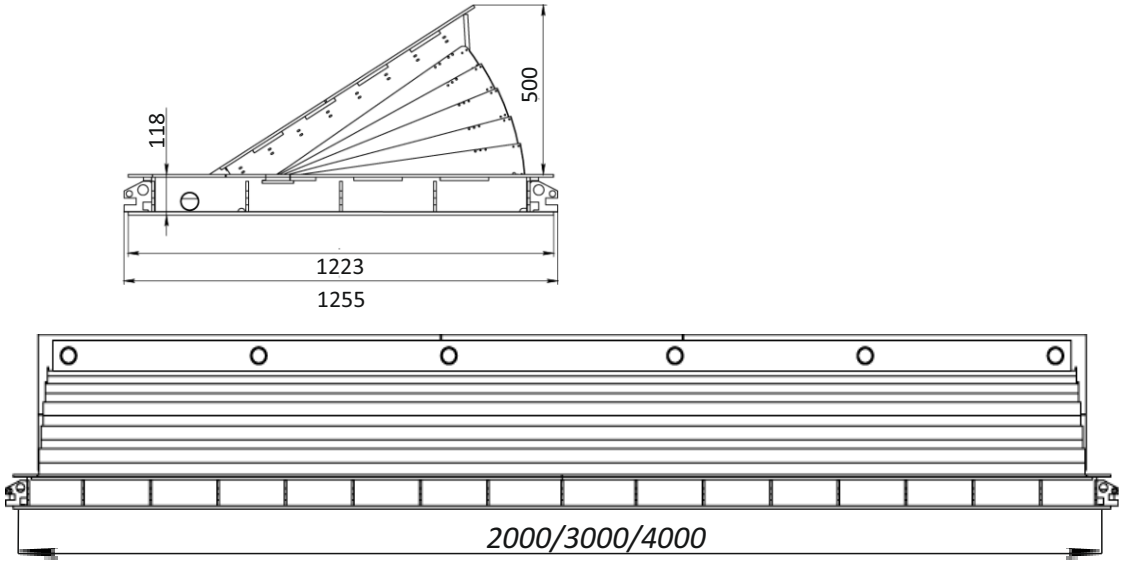

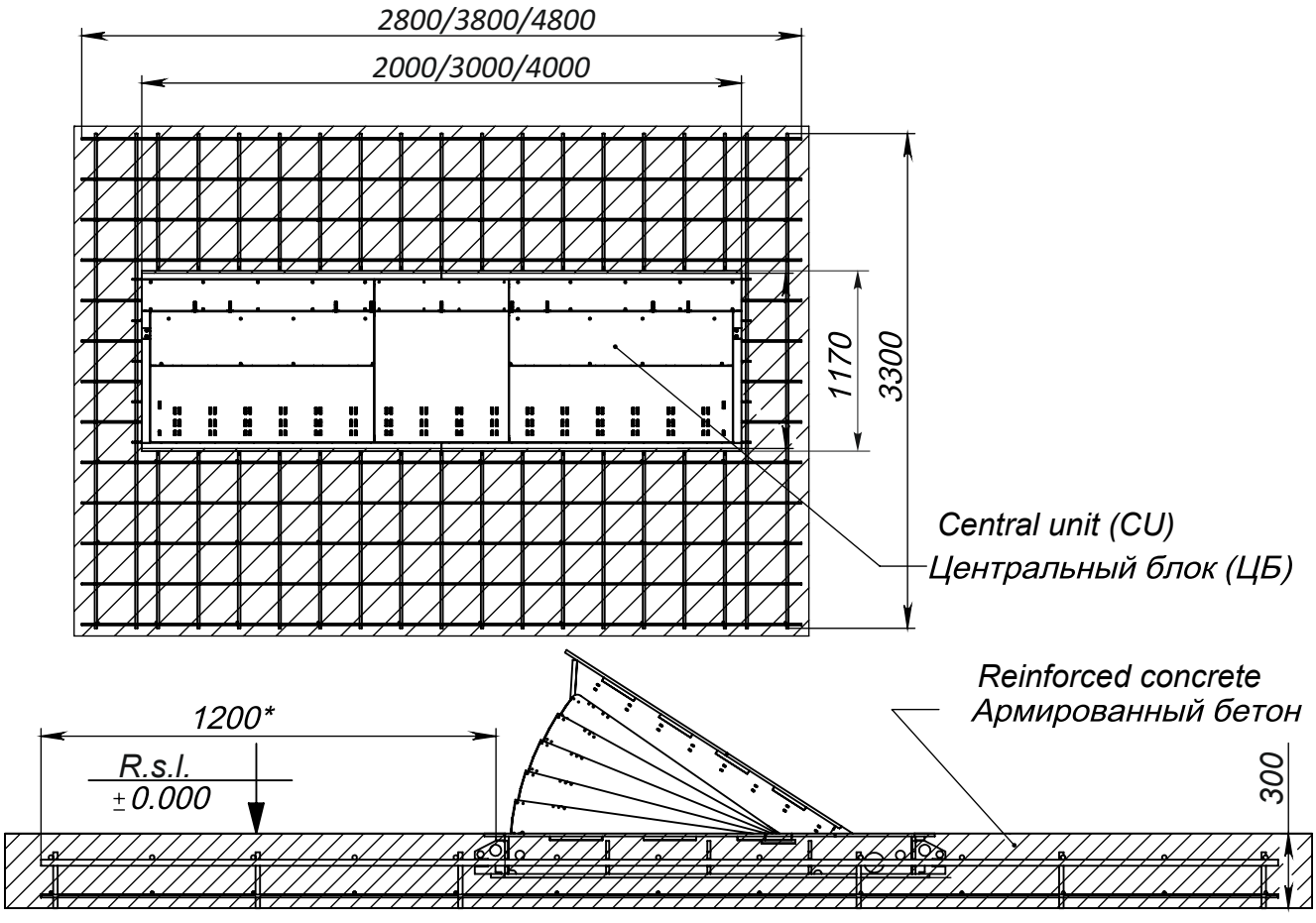

5. Product Specification

5.1 Surface-mount road blocker scope of delivery

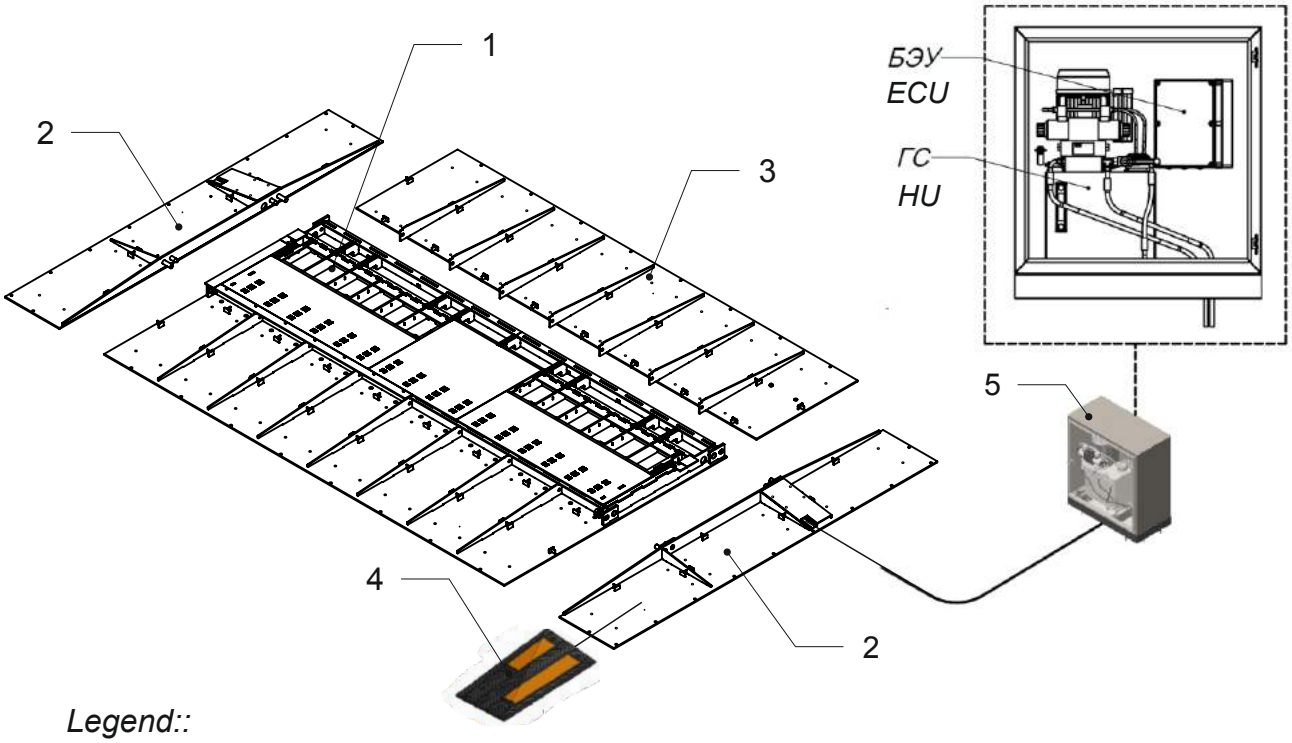

Legend::

1. *Road blocker assembly (central unit with front ramp);*
2. *Side ramp;*
3. *Rear ramp;*
4. *Rubber ramps;*
5. *Control cabinet:*
   - *Hydraulic unit (HU);*
   - *Electronic control unit (ECU)*

5.2 Submersible road blocker scope of delivery

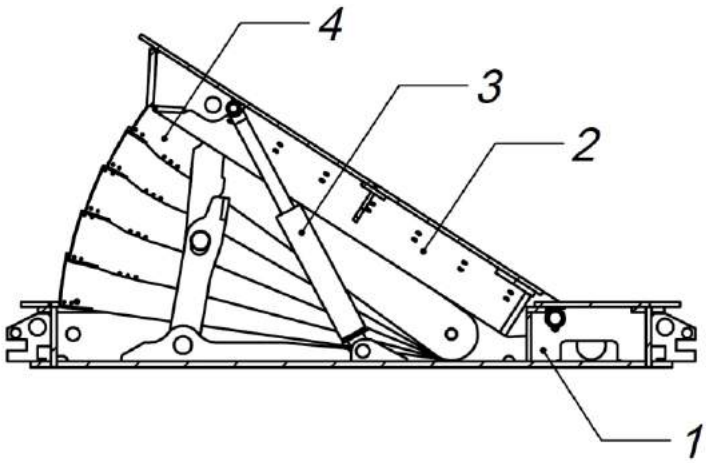

Legend:

1. *Static part (SP);*
2. *Dynamic part (DP); (raising platform);*
3. *Hydraulic cylinder (HC);*
4. *Protective shutters.*

6. Road Blocker Installation

6.1 Arrangement of installation site:

- Arrangement of installation site must comply with requirements of the applicable regulations and standards.
- Installation area shall be fenced along perimeter with temporary security fencing or caution tape at the distance of 3 meters from the installation site.
- The appropriate warning signs complied with ISO 7010: 2011 shall be installed in front of the entrance to the installation site.

- Make sure that there are no underground utilities at the installation site!
- Keep outsiders away from the installation site!
- Safety regulations must be observed during installation!

6.2 Installation sequence:

- Preparation of installation pit;
- Arrangement of concrete base (foundation);
- Installation of utility conduit;
- Installation of the road blocker in the designed position;
- Installation of ramps in the designed position (if surface mounted);
- Connection of utilities.

6.3 Installation procedure:

6.3.1 Preparation of installation pit for surface mount:

1. The required marking according to the design solutions to be made
2. The roadbed to be removed, if appropriate;
3. A pit with dimensions of WxL (Table 2) and depth of 300 mm to be dug;
4. The pit bottom to be covered with waterproof film;
5. Reinforcing net (reinforcement cage) to be installed;
6. 300mm concrete layer to be poured (Concrete C25/30 according to ENV-206.

Table 2 - Pit dimensions

Model	RB359-02	RB359-03	RB359-04
L	4450	4450	4450
W	3500	4500	5500

- Reinforcing and concreting shall be performed according to the applicable standards;
- Soils to be compacted with respect to their mechanical parameters according to the applicable design regulations ;
- It is recommended to use concrete vibro-shrinking means;
- It is advised to use waterproof additives to obtain water-resistant concrete.

6.3.1.1 Pit for the road blocker surface-mounted installation

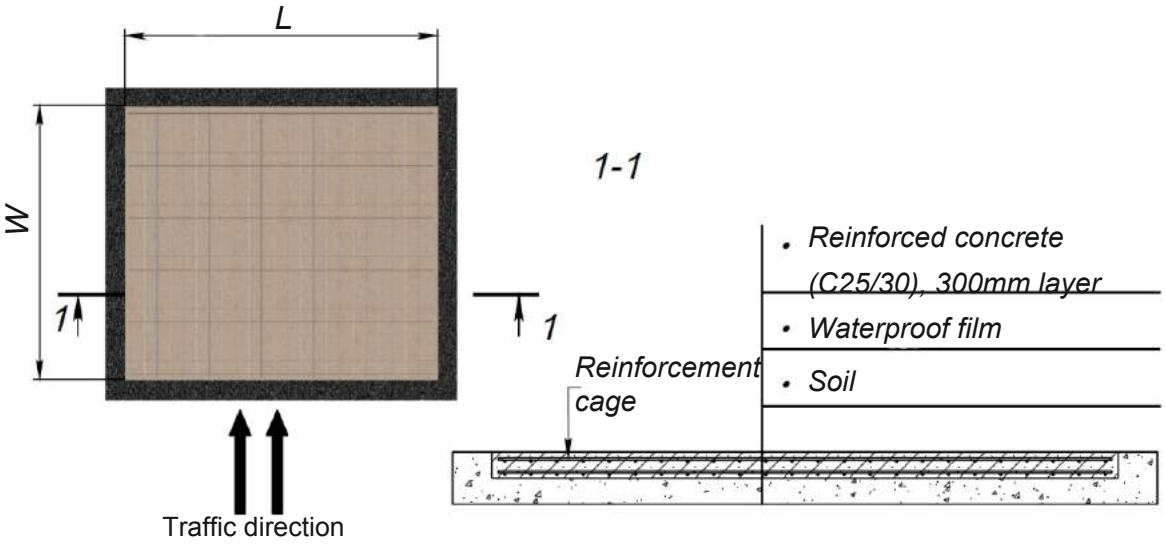

Reinforcement cage design:

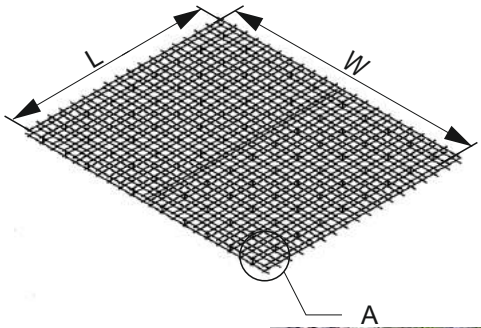

Table 2 - Reinforcement cage dimensions

Model	*RB359-02*	*RB359-03*	*RB359-04*
L	4350	4350	4350
W	3400	4400	5400

Reinforcement cage (reinforcing net) can be delivered as additional option along with the road blocker or can be manufactured by the site supervisor according to drawings of the company "TISO PRODUCTION".

6.3.1.2 Road Blocker installation in the designed position:

The Road Blocker to be installed in the designed position by means of handling equipment.

- *Safety regulations must be observed according to the applicable standards during handling operations!*
- *Slinging must be performed by the properly qualified slingers having the appropriate permit to work;*
- *Presence of unauthorized persons at the installation site during handling operations is PROHIBITED!*

6.3.1.3 Sequence of operations:

1. The product to be unpacked;

2. Outside condition and configuration of the road blocker to be checked;

3. Road blocker to be installed in the predesign position;

4. Rubber ramps to be removed on all ramps, if they were installed by the manufacturer;

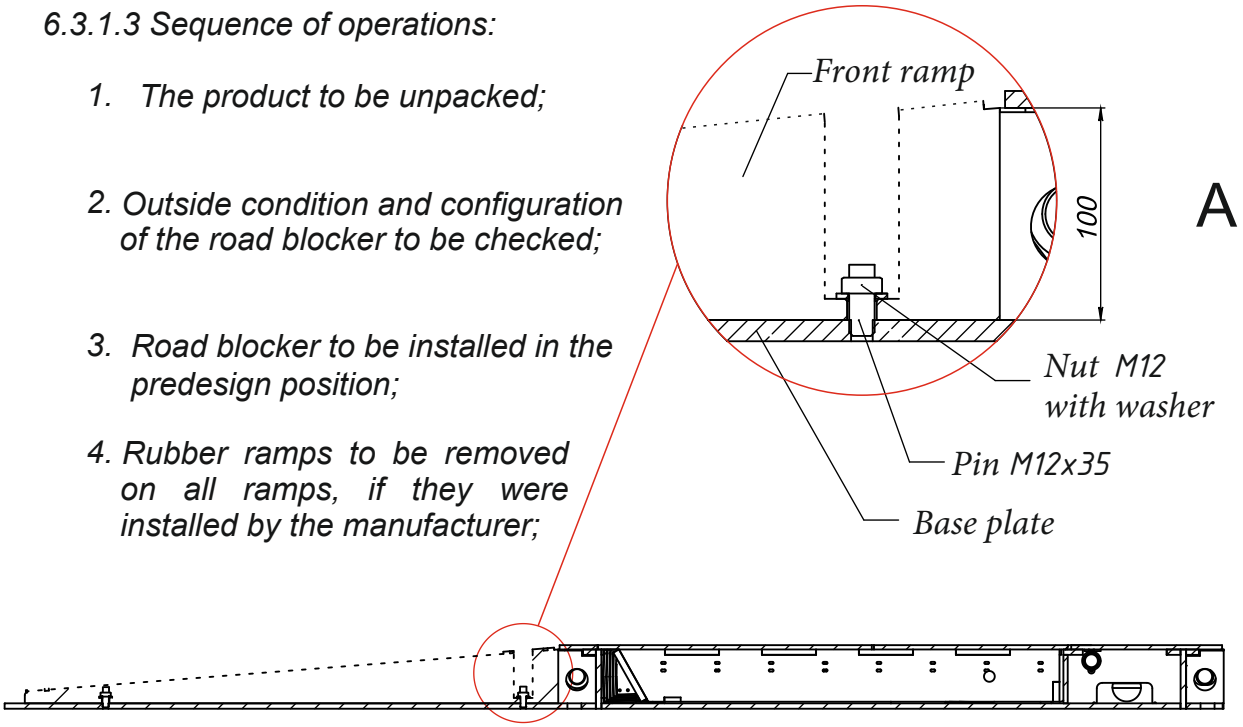

5. Bushings to be removed and eye-bolts to be inserted into holes of the central unit with front ramp;

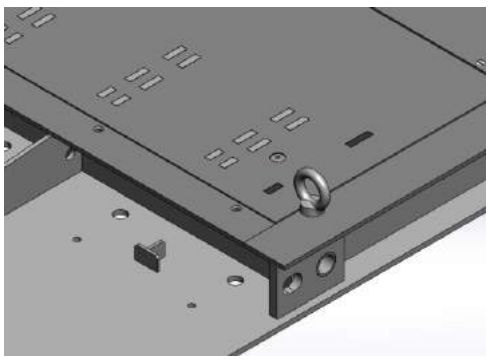

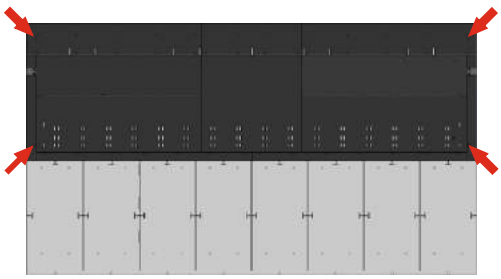

6. The road blocker to be installed in the designed position by means of handling equipment*.

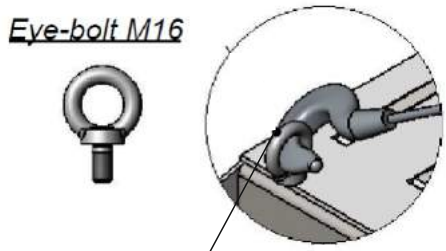

General view of the Road Blocker components fixation in the designed position

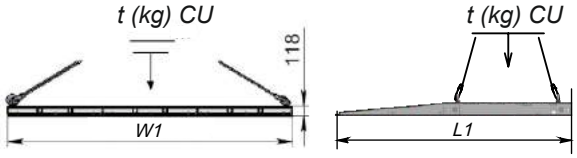

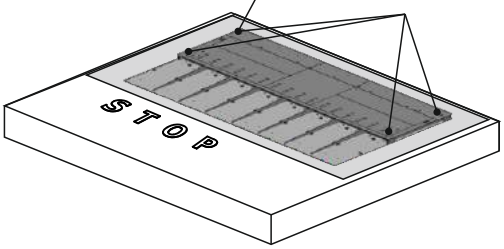

Road blocker fixation diagram*

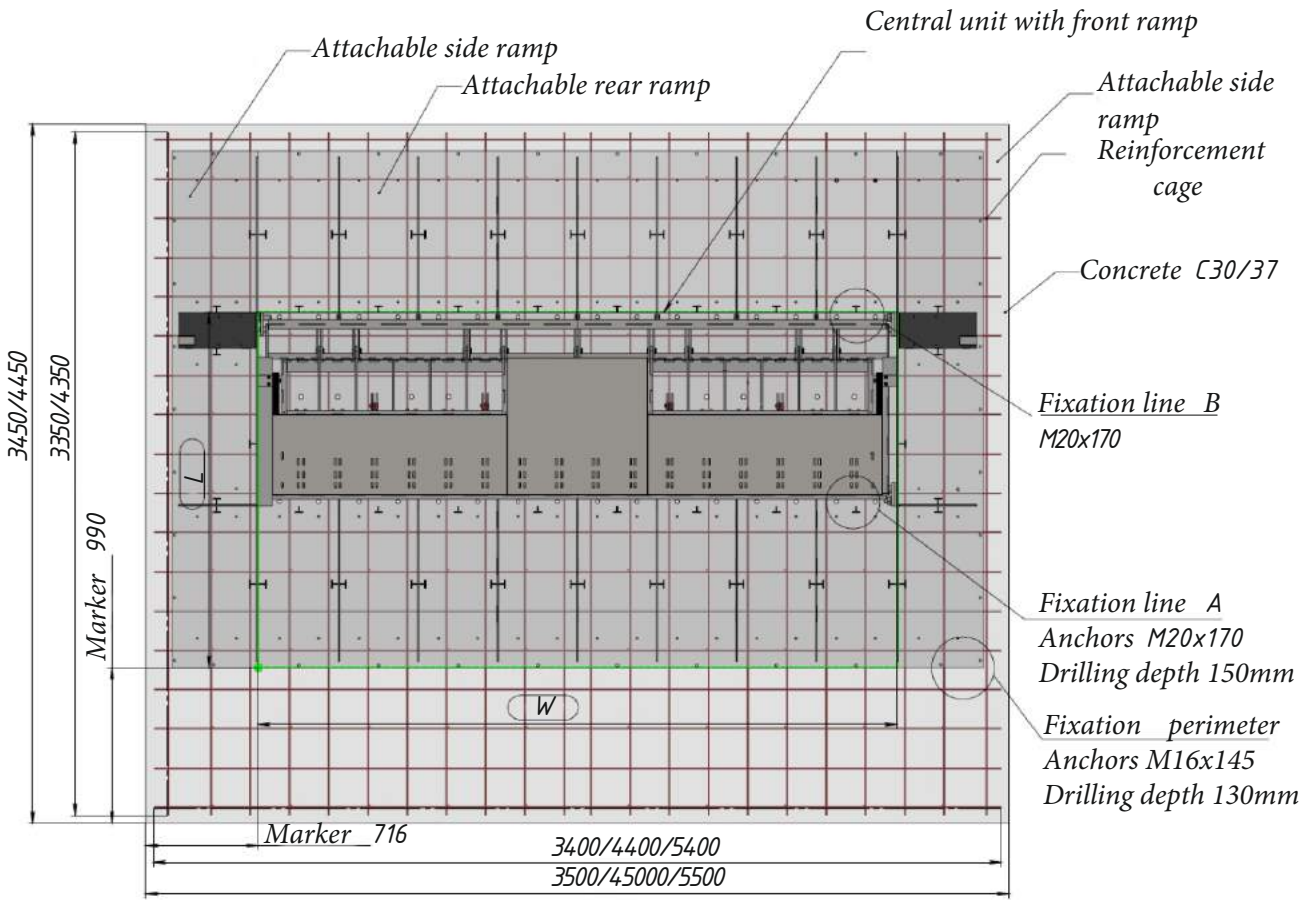

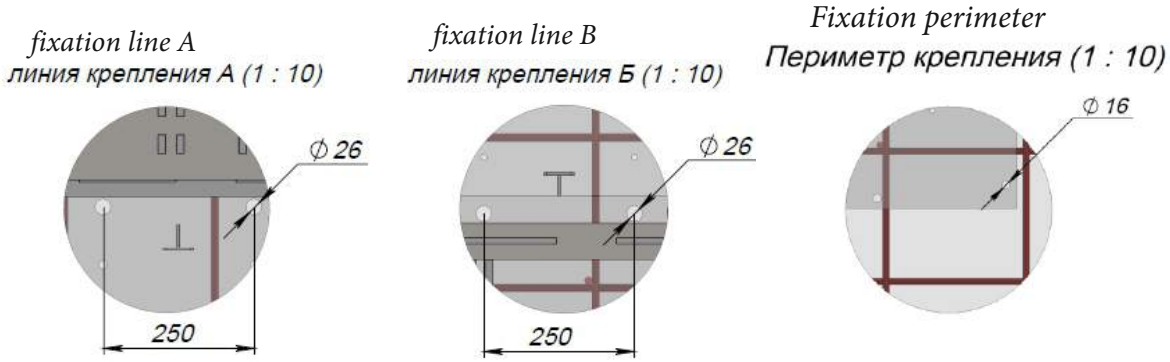

* Number of anchor holes is different depending on the anticrossing barrier width.

Road Blocker installation in the designed position:

The road blocker horizontal position and compliance with the design reference marks shall be checked by means of leveling instrument prior to its fixation.

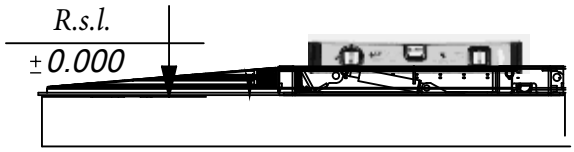

Road Blocker designed position

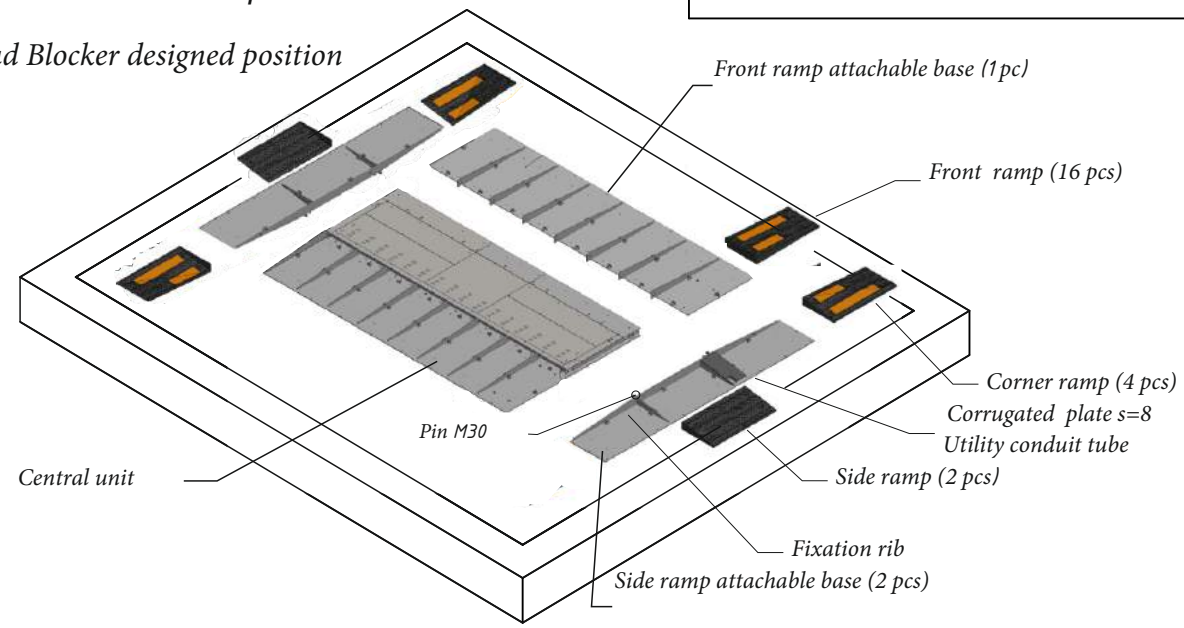

Road Blocker fixation:

1) Central block is fixed on the fixation line A and B (See page 13 "General view of the Road Blocker components fixation "):

   - 20 mm diameter and 150 mm depth hole to be drilled;
   - to be cleaned carefully;
   - anchor M20x170 to be inserted;

2) Front ramp attachable base ribs to be inserted in slots of central unit and to be joined by means of anchors M20x170;

3) Electric cable and hydraulic hose ends shall be brought out through utility conduit tube prior to installation of side ramp on the utility conduit side.

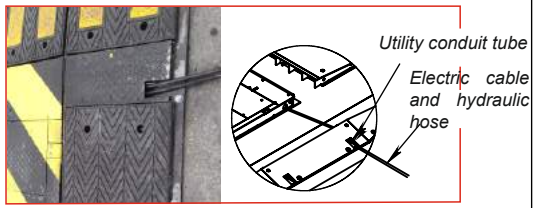

4) Side ramp base to be joined with central unit by means of pins **M30**, located on fixation rib;

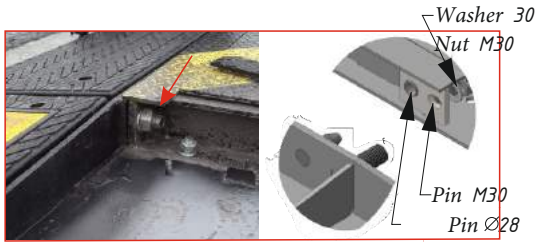

5) Rubber ramps are fixed by means of 12 mm diameter pins provided on ramp base plate and fixed with nut M12 with washer;

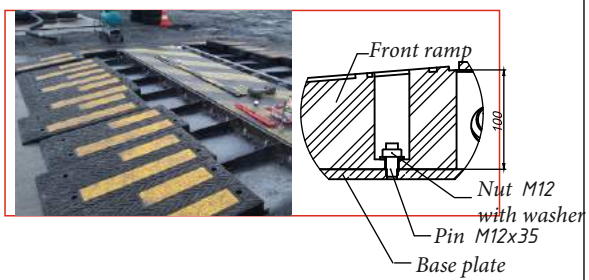

6) After installation of rubber ramps the Road Blocker completed with ramps to be fastened along perimeter to concrete base (foundation) by means of anchors **M16x145**, drilling depth 130 mm.

Utility conduits (corrugated hoses) to be laid from Road Blocker to control unit after the Road Blocker is installed in the designed position.

Forced water discharge pipe (hose) to be laid, if applicable.

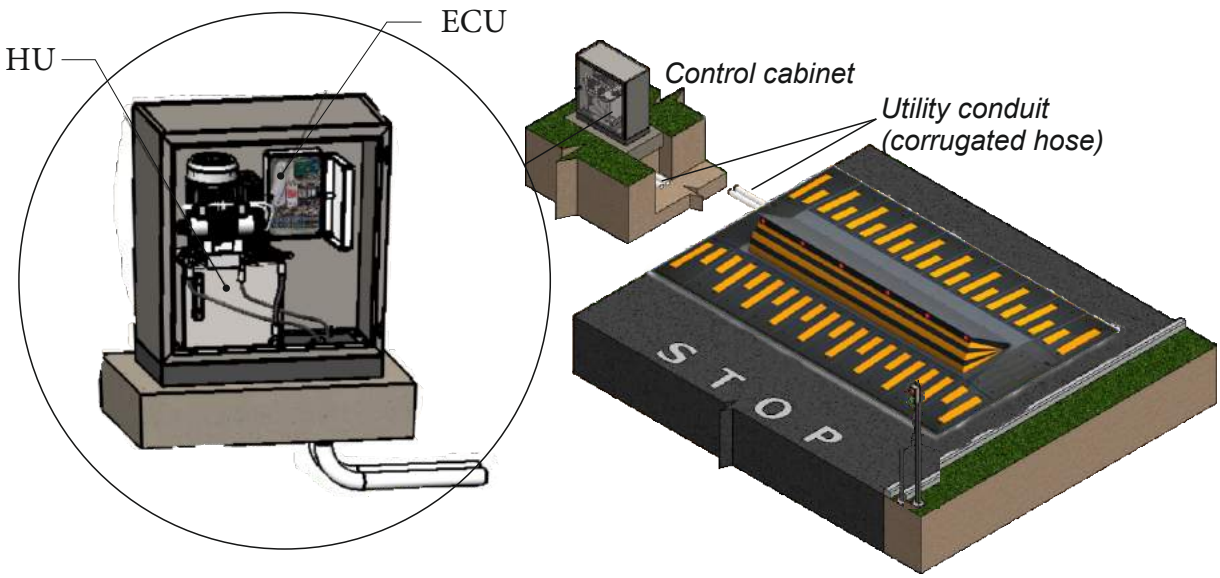

6.3.2. Preparation of pit for submersible installation:

1. The required marking according to the design solutions to be made;
2. The roadbed to be removed, if appropriate;
3. A pit with dimensions of W x L (Table3),and depth of 450*mm to be dug;
4. 50 mm sand cushion to be prepared;
5. Formwork to be installed;
6. Geotextile to be put on the pit bottom;
7. The pit to be filled with gravel (10-20 mm grain size) at the height of 200 mm;
8. Drain pipes of ø75мм H=210mm to be installed into gravel at the depth of 50mm;
9. Reinforcing net (reinforcement cage) to be installed;
10. Road Blocker to be installed in the designed position*;
11. Reinforcement cage net to be welded in the relevant points to hinges along the Road Blocker perimeter*;
12. 300 mm concrete layer to be poured (Concrete C25/30).

* - Fixation of reinforcement cage to the Road Blocker in the predesign position and the Road Blocker installation into the pit along with reinforcement cage are allowed.

6.3.2.1 Pit for the Road Blocker submersible installation

Option 1

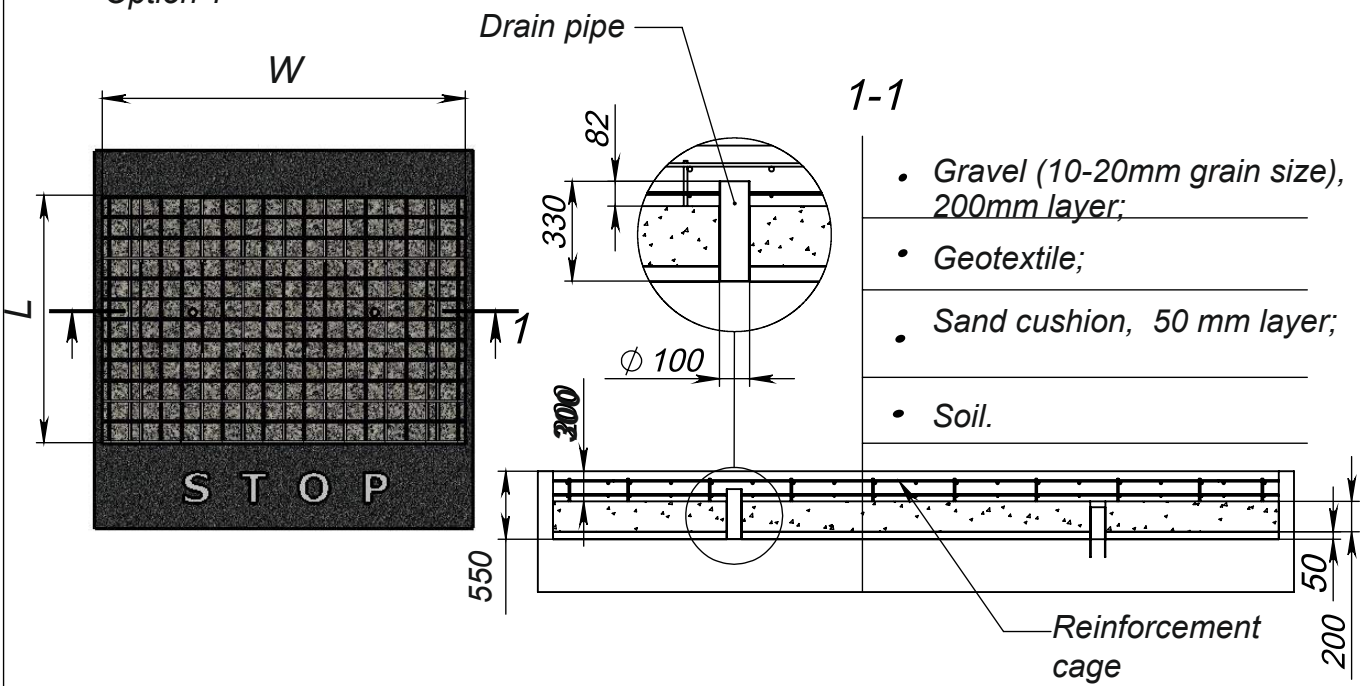

Table 3 - Reinforcement cage dimensions for submersible installation

Model	*RB359-02*	*RB359-03*	*RB359-04*
L	3300	3300	3300
W	2800	3800	4800

Option 2

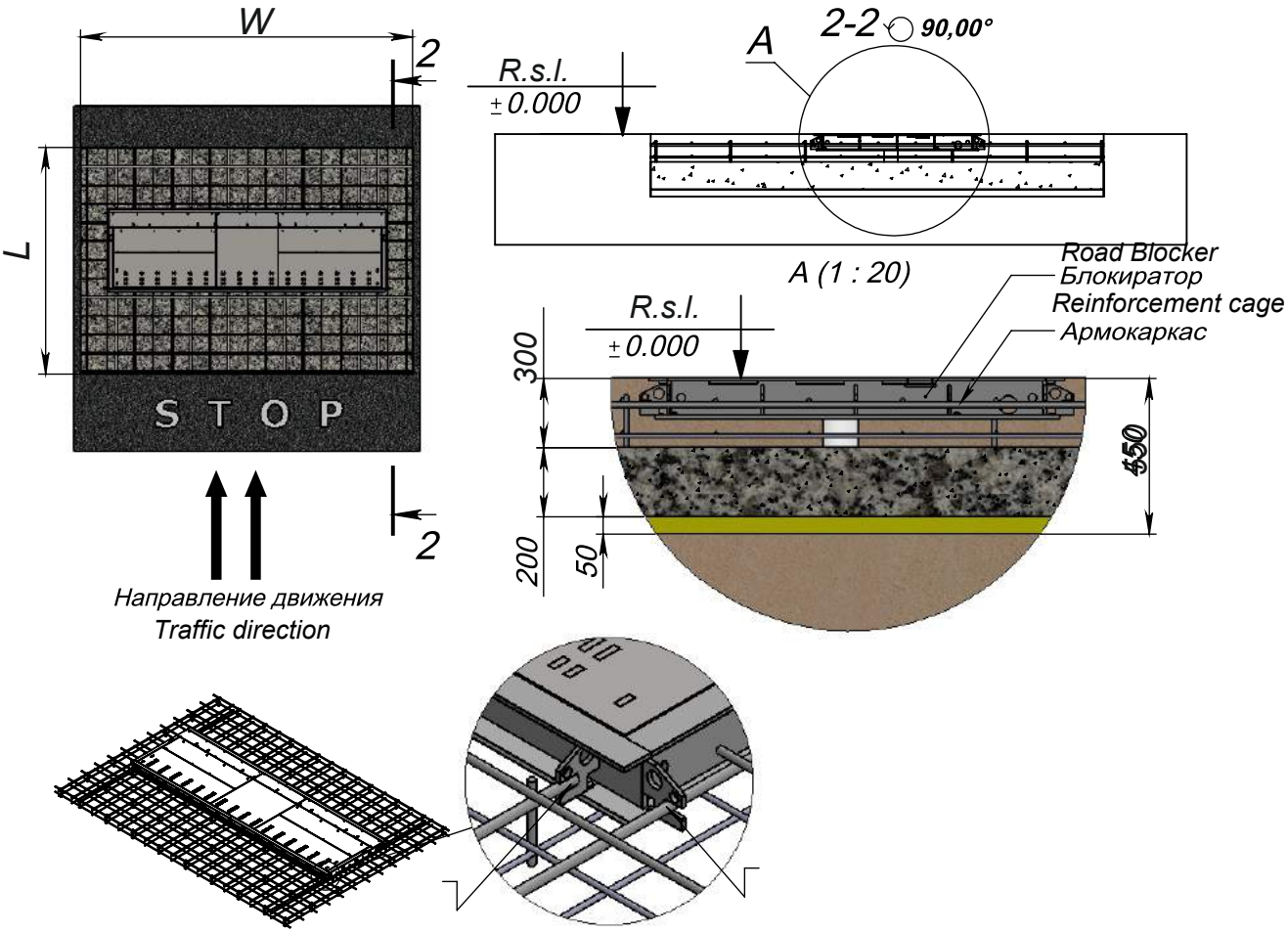

Reinforcement cage (reinforcing net) can be delivered as additional option along with the product or can be manufactured by the site supervisor according to drawings of the company "TISO PRODUCTION".

6.3.2.2 The submersible Road Blocker installation in the designed position:

The Road Blocker to be installed in the designed position by means of handling equipment.

- *Safety regulations must be observed according to the applicable standards during handling operations!*
- *Slinging must be performed by the properly qualified slingers having the appropriate permit to work;*
- *Presence of unauthorized persons at the installation site during handling operations is PROHIBITED!*

Sequence of operations:

1. The product to be unpacked;
2. Outside condition and configuration of the road blocker to be checked;
3. Road blocker to be installed in the designed position;
4. Eye-bolts M16 to be installed;
5. The road blocker to be installed in the designed position by means of handling equipment.*

** - Fixation of reinforcement cage to Road Blocker in the predesign position and the Road Blocker installation into pit along with reinforcement cage are allowed.*

1) The submersible Road Blocker installation in the designed position:

Option 1

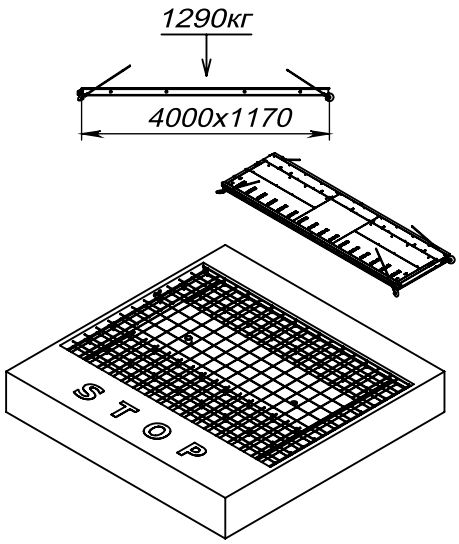

Option 2

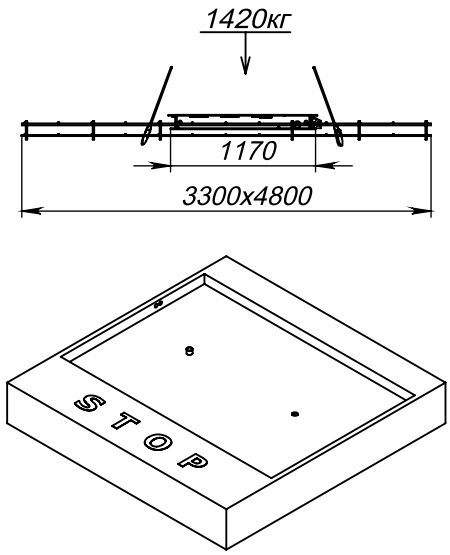

Eyebolts to be removed and EPDM plugs to be inserted into installation holes upon completion of handling.

Utility conduits (corrugated hoses) to be laid from Road Blocker to control unit after the Road Blocker is installed in the designed position.

A forced water discharge pipe (hose) to be laid, if applicable.

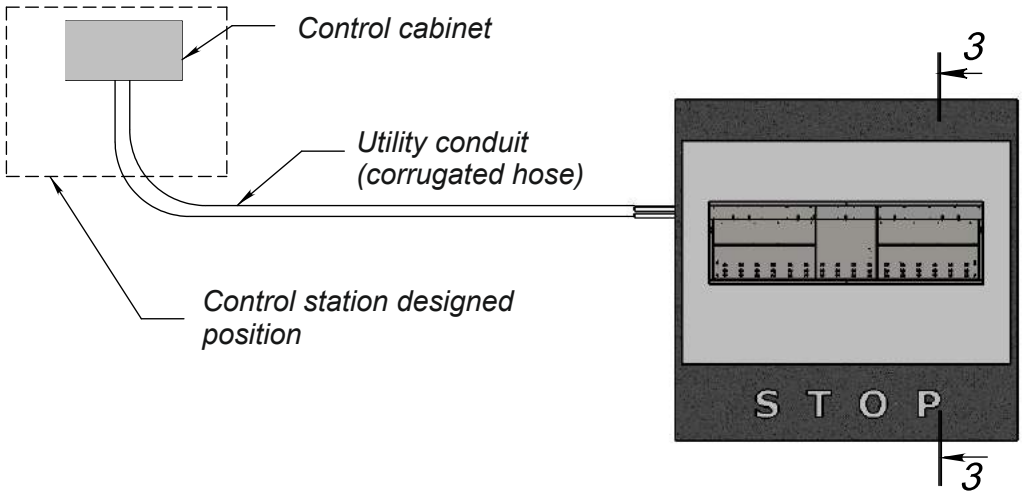

The Road Blocker horizontal position shall be checked by means of leveling instrument after the Road Blocker and reinforcement cage are installed in the designed position and utility conduits (corrugated hoses) are laid. The pit to be filled with concrete to the roadbed level.

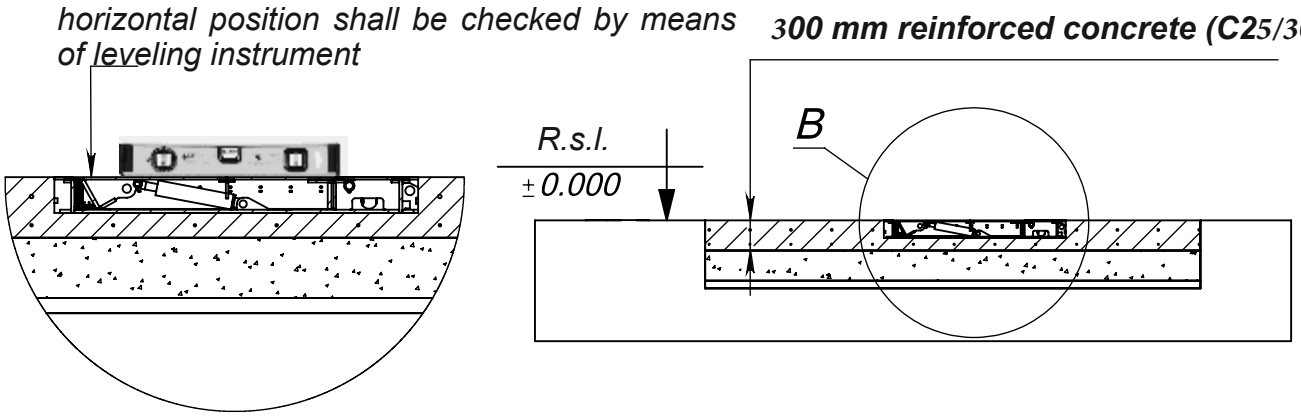

- *Reinforcing and concreting shall be performed according to the applicable standards;*
- *It is advised to use concrete vibro shrinkage means;*
- *It is advised to use waterproof additives to obtain water-resistant concrete.*

Road Blocker installation option

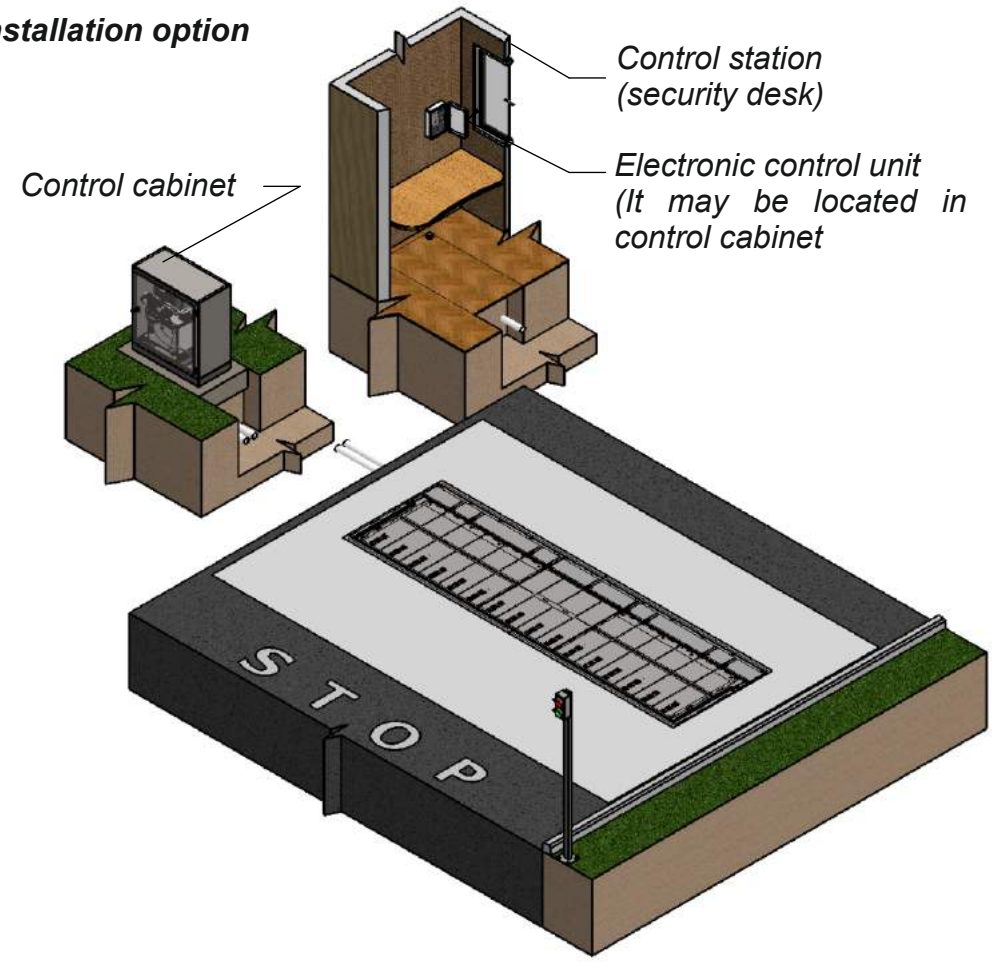

7. Road Blocker connection to control unit

- Make sure of the road blocker installation accuracy and attachment security prior to its connection.
- Take a close look at the hydraulic system and power supply connection diagrams as well as hydraulic unit and electronic control unit operation instructions.

Control unit is assembled in case (box) and is located in cabinet of peripheral hydraulic unit. Accordingly control cable, protective earthing cable and two hydraulic hoses are connected from the peripheral hydraulic unit cabinet to the Road Blocker. Control cable and earthing between Road Blocker and control unit is put in plastic or corrugated pipe.

1. High pressure hoses to be connected to hydraulic unit according to connection diagram.
2. Road Blocker to be connected control unit with control cable and earthing cable.
3. 50 cm cable length margin from each side to be left to ensure remedial maintenance. Cable length margin to be folded inwards utility conduit.
4. The Road Blocker wiring and operation is performed according to **OPERATION MANUAL. PART II. "Wiring of the Road Blockers (of RB series)"**, with external 1-phase or 3-phase hydraulic unit and putting them into operation", and "Annex 1-2".

- The road blocker utilities must be connected when it is deenergized!
- The relevant instructions should be strictly followed during connection!
- The Road Blocker utilities must be connected only by the properly qualified professionals!

It is advised to lay electrical cables in corrugated polyamide tube with waterproof sealed connectors to protect them against mechanical damage and environmental harmful impact.

8. Precommissioning

Commissioning, equipment adjustment, troubleshooting shall be performed only by the properly qualified professionals!

Safety regulations should be observed during commissioning and equipment adjustment!

It is forbidden:

1. *to prevent raising/sinking of road bloker platform;*
2. *to touch the road blocker's moving parts during its operation;*
3. *to initiate movement of vehicles prior to complete sinking of the road blocker's anticrossing elements.*

The area adjacent to road blocker shall be free and clear of foreign items.

8.1 Preparation for precommissioning:

- *Compliance and reliability of the road blocker, hydraulic unit and control unit electrical cable connections to be checked;*
- *The roadbed around road blocker to be restored;*
- *The equipment power network to be checked;*
- *Reliability of connection with earth loop to be checked.*

8.2 Precommissioning:

- *Hydraulic unit and control unit to be energized;*
- *Road Blocker trial operation to be conducted;*

The following shall be checked while conducting trial operation:

1. *Hydraulic unit operation parameters;*
2. *Control unit and remote control panel operation parameters;*
3. *Road Blocker operation parameters.*

- *The required equipment performance parameter setting to be set, if appropriate.*
- *Oil to be refilled after hydrauluc unit is actuated and air is removed from hydraulic cylinders.*
- *If a fault is detected it is necessary to trace the trouble and remedy it, if applicable* (See Table 1).*

Table 1. Road Blocker Troubleshooting

Symptom	Possible cause	Remedy	Notes
Anticrossing platform is raising by fits and starts	1. There are foreign particles in guiding grooves. 2. Shaft seizure. 3. Cylinder is jammed.	1. Guides to be cleaned and shafts to be lubricated. 2. Cylinder condition to be checked and replaced, if appropriate.	
Incomplete raising and sinking of platform	There are foreign particles in guiding grooves.	Guides to be checked and cleaned. Shafts to be lubricated.	
Actuation of hydraulic unit is far too often	1. Oil leakage. 2. Air inleakage.	1. Hydraulic connections to be checked. 2. Air to be evacuated from hydraulic system.	
Operation noise	1. High-viscosity hydrolic fluid. 2. Pump is worn out. 3. Air inleakage.	1. Oil to be changed. 2. Pump to be replaced. 3. Air to be evacuated from hydraulic system	
Excessive heating of hydrolic fluid	1. Contamination of hydraulic system. 2. Continuous operation.	1. Hydraulic system to be cleaned. 2. Operation conditions to be observed according to the datasheet.	

9. Road Blocker Operation Regulations

9.1 To ensure the road blocker continuous and reliable operation it is necessary:

- to use the Road Blocker according to its intended purpose;
- all rules specified in this Manual shall be strictly observed during operation;
- to provide maintenance and repair of equipment in due time;
- to prevent the Road Blocker operation and maintenance to be performed by unauthorized persons;

9.2 Equipment Maintenance:

9.2.1 The Road Blocker maintenance includes preventive measures to be taken according to the established frequency to maintain the Road Blocker in operational condition, decrease component wearing and prevent faults and malfunctions.

Equipment examination and maintenance shall be performed according to Schedule (See Table 2) and only by the properly qualified professionals.

9.2.2 Recommended types of the road blocker maintenance (M):
Daily inspection (each shift);
M-1 (monthly);
M-2 (semiannually);
M-3 (annually);
Major repair (MR) – after 20000 cycles.

Table 2. Road Blocker maintenance schedule

M type	Frequency	Scope of control/work
Daily inspection	each shift	Normally the daily maintenance is performed before commencement of work and includes visual inspection of the Road Blocker and, if required, prompt mechanical troubleshooting, elimination of corrosion and surface pollution. The following control shall be conducted during daily maintenance: • availability of all units and sensors in their proper locations and their fastening security; • performance of all sensors and cable integrity; • Road Blocker normal operation without jerks and abnormal noises, jamming of movable constructional elements; • motor heating (over 70°C).
M-1	monthly	M-1 is performed monthly and includes the following measures: •measures in the scope of daily inspection; •elimination of dust from the road blocker housing and components; •cleaning of actuators, sensors and actuators; •verification of sensors fixation reliability and their performance; •verification of good condition and fastening security of cable connections to actuators, sensors; •check of availability and integrity of protective fences and devices.
M-2	semiannually	M-2 maintenance is performed semiannually including the following types of work: •measures in the scope of M-1; •verification of fastening security of units and devices.

Continued Table 2

M type	Frequency	Scope of control/work
M-3	annually	M-3 maintenance is performed annually including the following types of work: •measures in the scope of M-2; •check of status of bearings, sealing cups and lubrication; •blowing and cleaning of terminal boxes; •tensioning of screw joints of terminal boxes; •check of reliability and quality of cable connections and earthing; •check of insulation resistance; •repair of paint coatings.

The hydraulic unit maintenance shall be performed according to the guidelines specified in the hydraulic unit instruction manuals, combining them with M-2 or M-3.

Major repair is recommended to be performed by the manufacturer or the dedicated repair service according to the manufacturer's documentation with the use of the manufacturer's spare parts as well as restored or manufactured by special repaire facilities according to the manufacturer's documentation.
Mean lifetime between major repair is at least 20000 hours.

- The time of maintenance and major repair can be increased or decreased depending on actual parameters of the road blocker operation and fixed by the company operating this equipment.
- All types of maintenance should be recorded in maintenance and repair work sheet.

9 .3 Safety regulations:

9.3.1 The appropriate safety measures shall be observed during operation and maintenance of the Road Blocker.

IT IS FORBIDDEN TO USE DEFECTIVE APPLIANCES, TOOLS, INSTRUMENTATION THE SERVICE LIFE OF WHICH EXPIRED.

9.3.2 The road blocker must be repaired by the persons being over 18, having at least level III of electrical safety qualification, the relevant permit to work with electrical facilities up to 1000V, being safety briefed at workplace and having scrutinized the product instruction manuals.

9.3.3 It shall be the responsibility of the owner to ensure safety measures.

9.3.4 Hazardous characteristics during the road blocker operation are:

- mechanical impact of raising/sinking dynamic part;
- electric shock by 220V/380V.

9.3.5 Service and repair shall be performed only when equipment is deenergized, a forbidding safety sign according to ISO 7010: 2011 with placard "Do not switch ON - men working!" is put on initiator. After completion of works safety signs to be removed and equipment to be activated only upon authorization of the work superintendent.

The road block is deenergized by switch K1 (S1) in the control unit box.

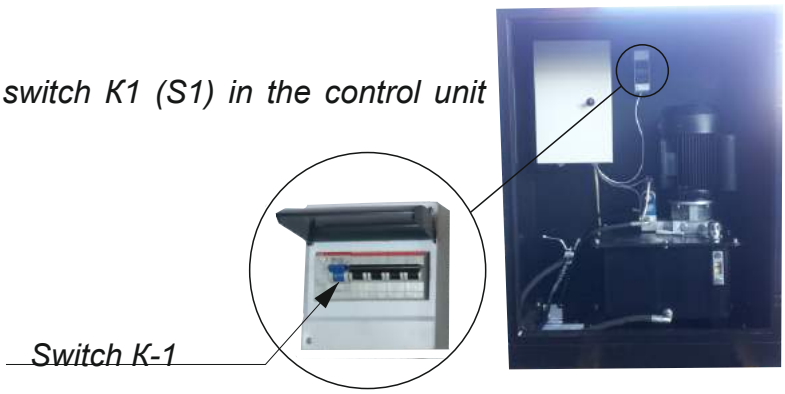

9.3.6 The road blocker electrical equipment should be earthed. Resistance between earthing bus and each accessible metal non-current-carrying part of the road blocker electrical equipment housing should not exceed 4 Ohm.

It is forbidden:

- to perform maintenance and repair when the road blocker electrical equipment is energized.
- to perform maintenance and repair when equipment is in operation.

9.3.7 General safety requirements accepted in the particular company should be in effect during installation and operation of the road blocker. Safety requirements to be observed during preservation and depreservation.

9.3.8 Fire safety rules to be observed when paraffin oil for rinsing of units and parts is used.

9.3.9 The safety instructions specified in the instruction manuals for purchased products and control system to be additionally governed by during the road blocker operation.

9.3.10 The Road Blocker operating in conjunction with other technological equipment should have common locking with it.

It is strictly forbidden:

- to allow the persons being unfamiliar with operation and safety rules to service the road blocker;
- to operate the road blocker unearthed;
- to touch current carrying elements;
- to touch movable parts of the road blocker during operation;
- to operate the road blocker when protective devices and switches are removed;
- to prevent the road blocker raising and sinking;
- to use metalwork of the road blocker for connection of neutral wire of electric welder;
- to perform welding works near the road blocker without noncombustible material protection to avoid its burning.

Warning!

- Prior to operation of the road blocker make sure that all units providing safety of works are in good condition and properly installed;
- It should be taken into account that the product could be damaged during transportation;
- Don't disconnect the elements providing safety of works and don't try to modify them;
- In case of any faults or defects, inform the person in charge of the product service.

10. Warranty Liabilities

The warranty period is 1 year.
The warranty period is effective from the date of road blocker sale.
The warranty is valid only subject to compliance with operation regulations and safety measures.
The warranty repair shall not be performed in the following cases:
- expiration of the warranty period;
- improper operation;
- the product bears the traces of tampering or attempt of unauthorized repair;
- damage resulted from the use of inappropriate accessories;
- damage caused by environment;
- damage resulted from the use of nonstandard or incompatible equipment;
- damage caused by exceeding of maximum permissible loads.

In all cases, when the product is not subject to warranty repair, a paid repair may be considered.

Warranty repair shall be performed upon availability:

- *Product datasheet;*
- *Warranty coupon with stamped date of sale.*

11. Road Blocker Hydraulic System

11.1 Basic technical specifications of hydraulic unit

The Road Blocker hydraulic actuation is provided by hydraulic unit.

Table 3. Basic technical specifications of hydraulic unit

Model		RB359-02	RB359-03	RB359-04
Maximum pump capacity,	l/min	10	15	17
Operating pressure,	MPa	7,5		
Motor				
Pump				
Shaft speed,	rpm	1500		
Alternate current	V	3Ph 400V		
Motor capacity	kW	1,5	2,2	3,0

11.2 Hydraulic unit fluid (is outside the scope of delivery):

when the ambient air temperature is -20 ^{0}C to +40 ^{0}C - Shell Tellus S2 M 32;
when the ambient air temperature is above zero - Tellus S2 M 46;
The grade of hydraulic fluid purity must be at least 5 according to ISO 8573.1.

11.3 Hydraulic Diagram:

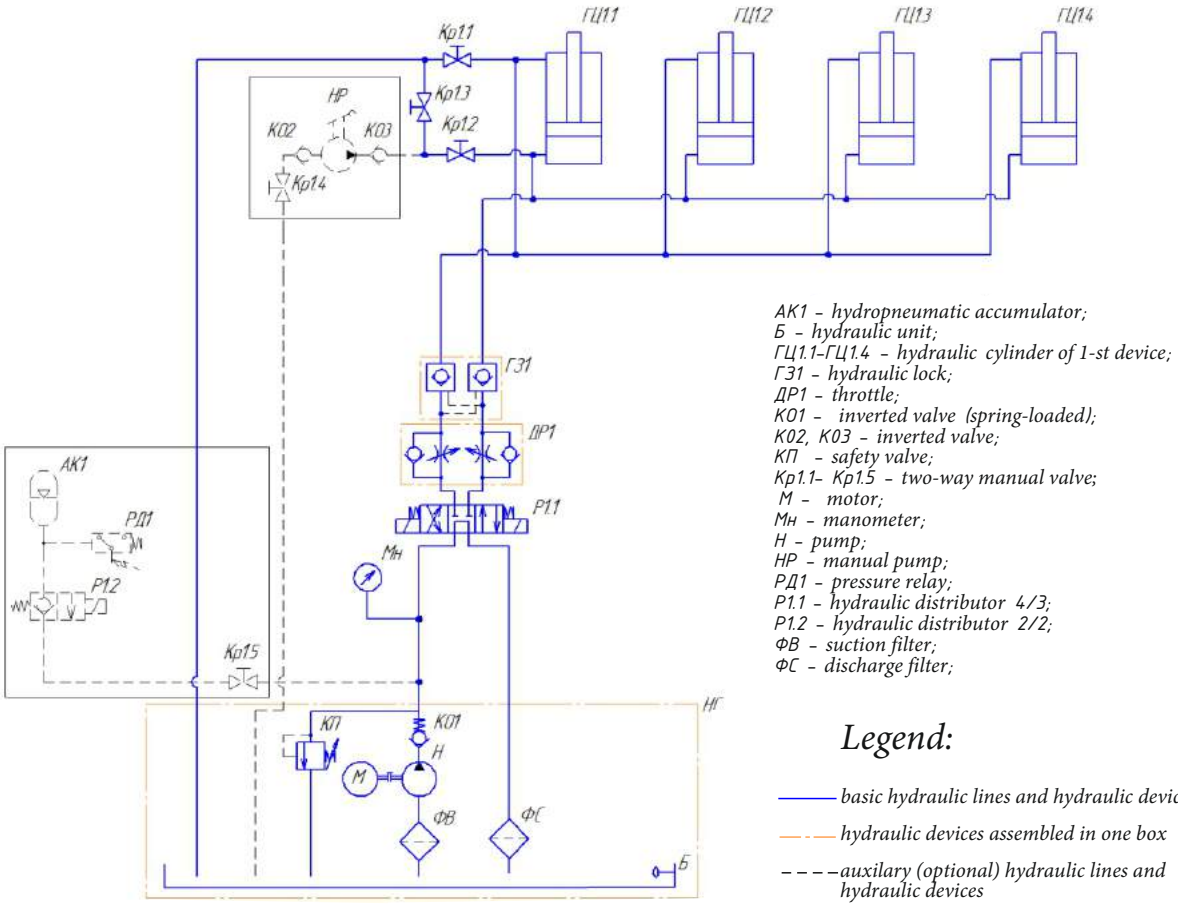

АК1 – hydropneumatic accumulator;
Б – hydraulic unit;
ГЦ1.1–ГЦ1.4 – hydraulic cylinder of 1-st device;
Г31 – hydraulic lock;
ДР1 – throttle;
К01 – inverted valve (spring-loaded);
К02, К03 – inverted valve;
КП – safety valve;
Кр1.1– Кр1.5 – two-way manual valve;
М – motor;
Мн – manometer;
Н – pump;
НР – manual pump;
РД1 – pressure relay;
Р1.1 – hydraulic distributor 4/3;
Р1.2 – hydraulic distributor 2/2;
ФВ – suction filter;
ФС – discharge filter;

Legend:

basic hydraulic lines and hydraulic devices

hydraulic devices assembled in one box

auxilary (optional) hydraulic lines and hydraulic devices

11.4 Road Blocker Hydraulic System Connection Block Diagram

Marking of connections shall be strictly followed during HPH connection.
In this case the device model to be taken into account:

- *ГЦ1.1-ГЦ1.2 to be connected for RB359-02;*
- *ГЦ1.1-ГЦ1.3 to be connected for RB359-03;*
- *ГЦ1.1-ГЦ1.4 to be connected for RB359-04;*

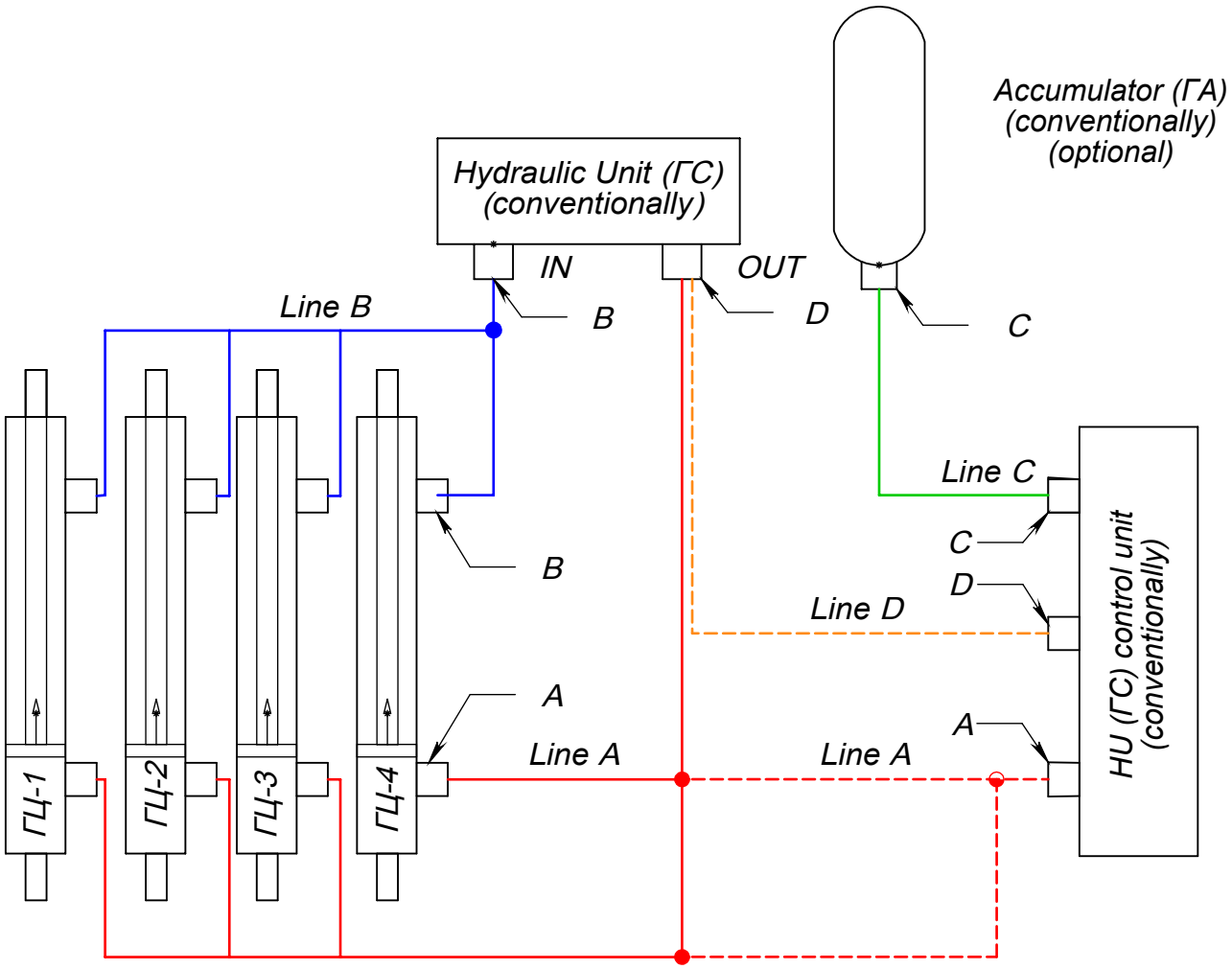

11.5 Configuration and dimensions of control cabinet:

Control cabinet dimensions:

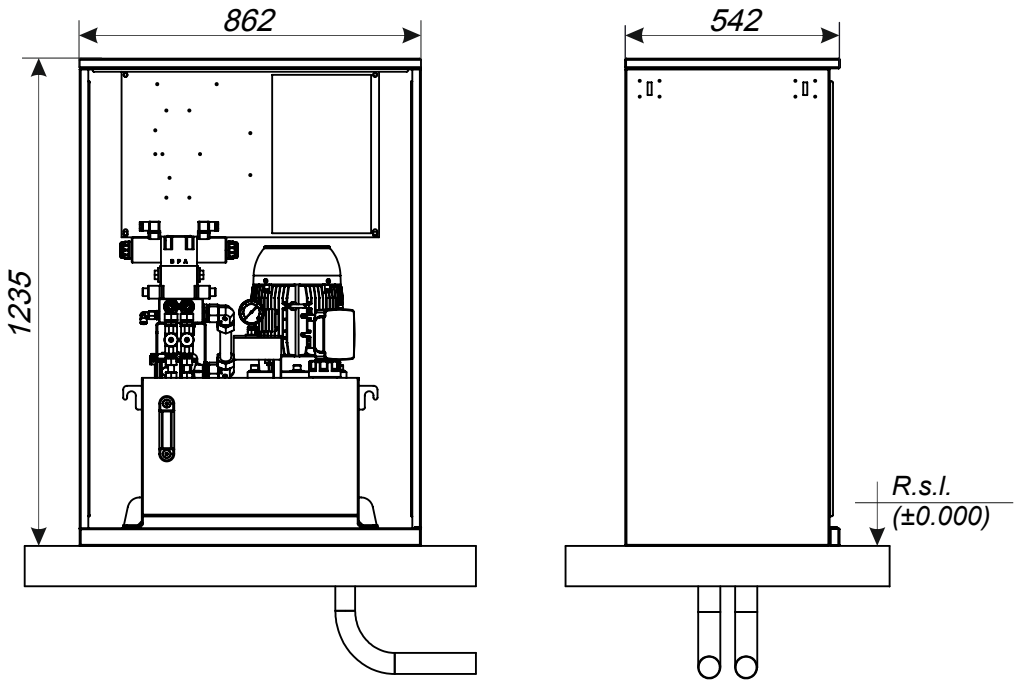

General view and configuration of control cabinet:

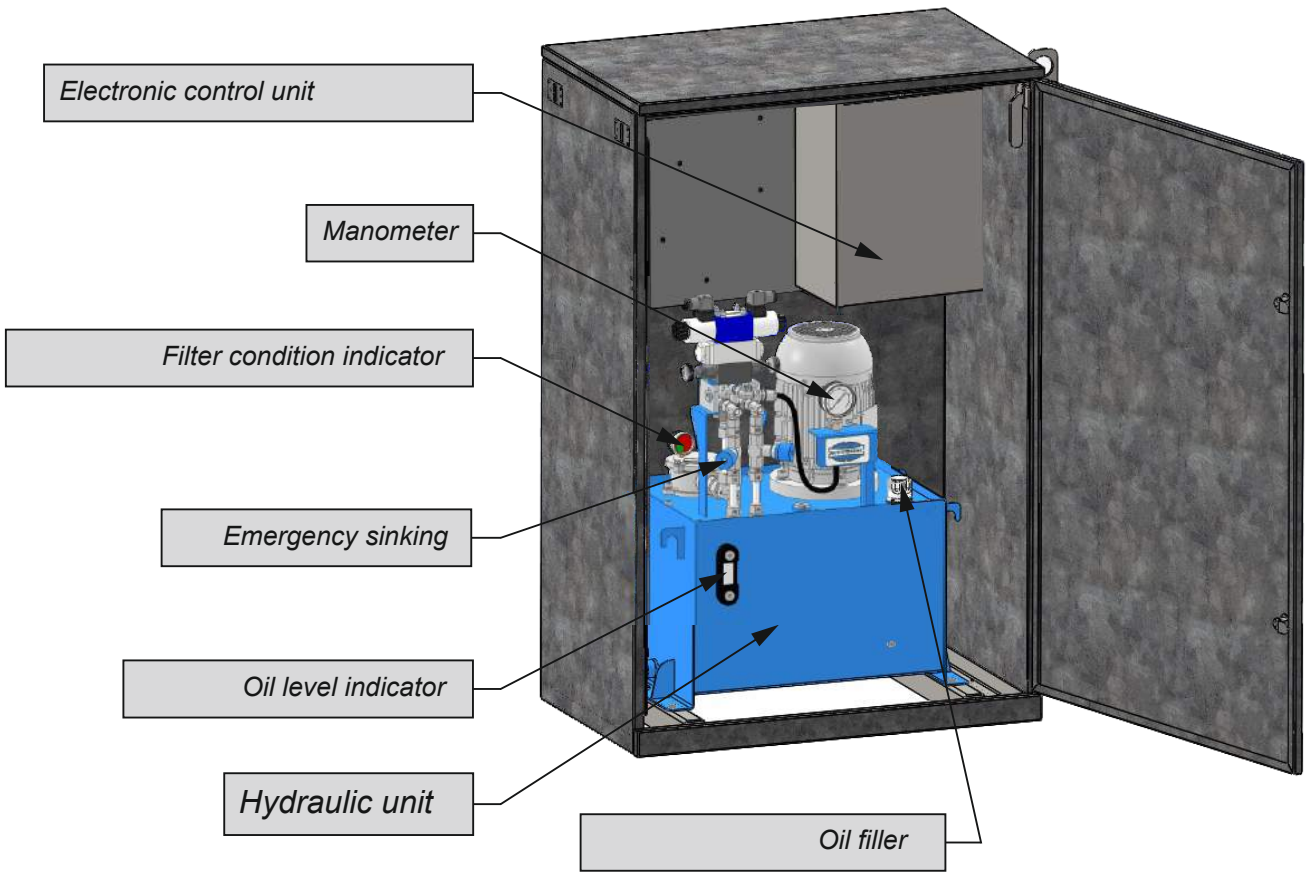

12. Notes: